MS150 / MS170

HighPrecision
Sheeter with Servo Driven

智能雙螺旋分切機(標準版)

智能雙螺旋分切機采用德國技術并結合多年生產切紙機的經驗，研發出來的高精度、高效率、高穩定的新產品。本產品廣泛應用于卡紙、銅版紙、牛皮紙、文化紙、雙膠紙、高光相紙、金銀卡紙、鋁箔紙、激光鐳射紙、烟酒包裝紙等。配有高質量雙回旋刀頭；無間隙齒輪，高速平衡刀座。有效保障刀頭在高速進行時的平穩性。同時配有高清直視雙屏同步系統，LCD 觸摸屏實現人、機、高效自動，讓操作人員更加得心應手。

經過對市場同類產品的分析以及思考，我們做出了與衆不同的決定：讓分切機高貴的氣質貫穿着整個產品的設計、加工、生產、裝配。整體加高機身、無間隙齒輪、進口大功率伺服、大功率儲能櫃、氣動中分刀系統、電動反曲系統、自動排廢系統、開降式壓紙機構等，數不勝數的特點供您 ——品鑒。

The intelligent double rotary sheeter adopts German technology and combines many years of experience in producing paper cutters to develop new products with high precision, high efficiency and high stability. This product is widely used in cardboard, art paper, kraft paper, cultural paper, double offset paper, high-gloss photo paper, gold and silver cardboard, aluminum foil paper, laser paper, tobacco and alcohol packaging paper, etc. Based on the target of improving the production efficiency for customers and optimizing the accuracy of products, it is equipped with high-quality cutting roller by avant-garde design and new technology, backlash-free gears, high-speed dynamic-balanced knife holders, Imported high-power servo system with energy storage cabinet and improved lubrication system to get more stable long-term precise cutting at high speed with lower noise; the high-definition LED touch screen with graphic direct-view interface design, dual-screen synchronization system for more convenient and comfortable operation; overall heightened body for more piling by each delivery. Compared to the other products in the market, we bring the sheeter noble and unique features for high-grade clients not only through the configurations as above introduced , but also by entirely high-level design, processing, production and assembly. Moreover, there are richer settings to select: pneumatic slitters system, auto waste ejection device, motorized de-curler, up-down type paper pressing mechanism, etc.

降本增效
G COST EFFICIENCY

实用价值
ACTICAL VALUE

聚焦需求
FOCUS ON DEMANDS

電控部分 ELECTRIC CONTROL PART

采用大尺寸工業電腦，INVT大功率伺服系統，配置自主知識產權的軟件控制系統。畫面和諧，顯示內容豐富，操作性强。高效的大功率伺服配合儲能器，有效的節省了電能，提高了經濟性真正做到了綠色節能。

Using large-size industrial computer, INVT high-power servo system, equipped with a software control system with independent intellectual property rights, the picture is harmonious, the display content is rich, and the operability is strong. High-efficiency high-power servo, combined with energy storage, effectively saves electric energy, improves economy, and truly achieves green and energy-saving.

主機機身 MAIN BODY

主機機身整體采用鑄件結構，使用中碳鋼，調質處理，精度等級要求高，確保機身穩定性，整機運行更加穩定，可靠。

The main body of the main body adopts a casting structure and is made of high-quality nodular cast iron. The accuracy level is required to ensure the stability of the body, and the whole machine runs more stable and reliable.

油料潤滑系統 OIL LUBRICATION SYSTEM

噴淋式齒輪潤滑系統，保障齒輪在整個運行過程中的充分潤滑。有效延長了機器的使用壽命。

The spray gear lubrication system ensures the gears are fully lubricated during the entire operation. Effectively prolong the service life of the machine.

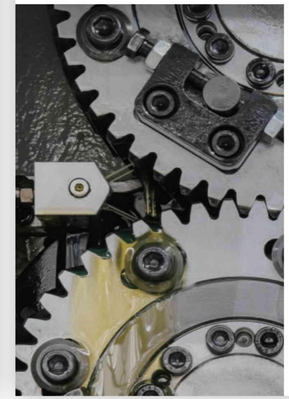

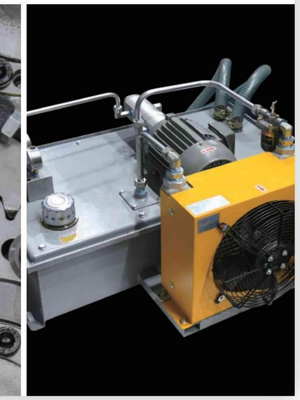

膠軸反曲 RUBBER ROLLER DE-CURLER (OPTIONAL)

使高克重及超高鬆紙張裁切平整，反曲效果更佳。

Make high grammage and thick paper flat, improve the de-curling efficiency

真空吸紙尾 VACUUM SUCTION ON PAPER EDGE (OPTIONAL)

可不使用壓紙輪減速，完全杜絕二次光斑出現。

Completely avoid light spots by using the vacuum suction instead of pressing wheels at low speed

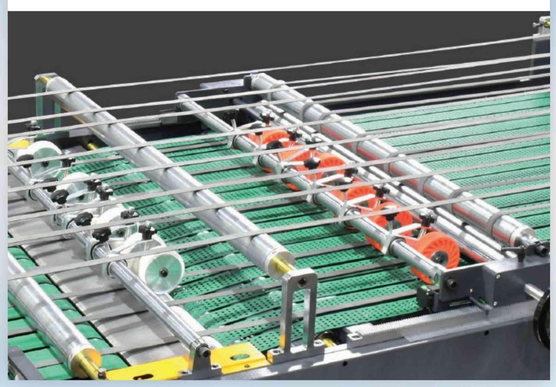

雙回旋螺旋刀組 DOUBLE ROTARY KNIFE SET

配置大功率高響應英國CT伺服，保障裁切的精度及效率。引進臺灣刀頭技術，無間隙齒輪結構設計，有效消除2把刀的晃動間隙，保障刀片的壽命及裁切精度。箱體采用球墨鑄鐵，時效處理後，經5軸高精度加工中心一次性加工完成，保證產品的精度及一致性。刀座采用整體式鑄件結構，有效保障刀體在高速運行時的平穩性。

Equipped with high-power and high-response British CT servo to ensure cutting accuracy and efficiency. The introduction of Taiwan's advanced cutter head technology and a gap-free gear structure design can effectively eliminate the shaking gap of the two knives, ensuring the life of the blade and cutting accuracy. The box body is made of nodular cast iron. After aging treatment, it is processed by a 5-axis high-precision machining center at one time to ensure the accuracy and consistency of the product. The tool holder adopts an integral casting structure, which effectively guarantees the stability of the tool body during high-speed operation.

氣動中分 PNEUMATIC SLITTING PART (OPTIONAL)

調節簡便，定位準確，氣動鎖緊。

Convenient adjustment, accurate positioning, lock tightly by pneumatic device

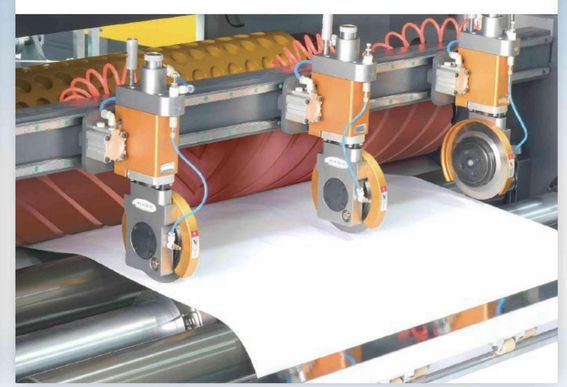

MZ 140 / MZ 170

High Precision Sheeter
With Servo Driven(Six-reel)
伺服電腦高精密卷筒紙分切機（六卷）

MZ 140 / MZ 170

High Precision Sheeter
With Servo Driven(Two-reel)
伺服電腦高精密卷筒紙分切機（雙卷）

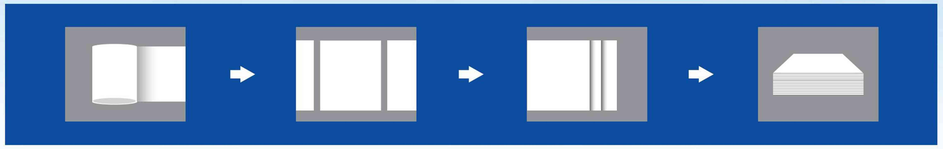

MZ 140 / 170 伺服電腦高精密卷筒紙分切機采用英國的技術，本機電腦控制系統采用伺服系統，并結合多位高級工程師研究生產切紙機的多年豐富經驗及生產工藝，研制出新一代高精度、節能　高效的產品。該產品廣泛應用于切卡紙、銅版紙、文化紙、牛皮紙、雙膠紙、高光相紙、金銀卡紙、鋁箔紙、烟酒包裝紙等產品。是造紙行業及印刷包裝產業中普遍采用的紙品裁切機。

MZ 140 / 170 Servo driven precision sheerer applise advanced technology from england and servo system for control. with rich experience and leading manufacturing technique of senior engineers, it is a new generation machine of high accuracy and efficiency which is widely used in paper mill, printing and packaging in dustry for cutting cardboard, coated paper, kraft paper, photo paper, alumimum foil paper, packing paper etc.

無軸式原紙架及PLC張力控制系統

SHAFTLESS BASE PAPER HOLDER AND PLC TENSION CONTROL SYSTEM

采用多點式張力控制系統，電腦測算自動反饋給PLC控制系統。通過比例閥實現剎車負荷之增減張力，達到自動控制紙張的張力，并可通過人機界面進行微調操作。

It adopts a multi-point tension control system, and automatically feeds back to the PLC control system through an infrared distance measuring electric eye. The tension of the brake load is increased or decreased through the proportional valve, which can automatically control the tension of the paper, and can be fine-tuned through the man-machine interface.

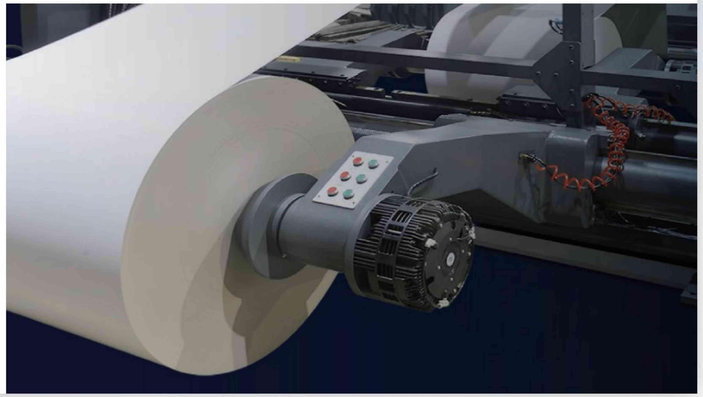

切刀部分

CUTTING KNIFE UNIT

1. 上刀輥：采用英國切刀方法，以有效降低切紙時的荷重及噪音，延 長切刀壽命上刀輥體以精鋼焊接後作精密加工，并經動態平衡調整，有效降低高速運轉時之震動及噪音。
2. 下刀座：下刀座采用鑄鐵一體成形鑄造，再經精密加工，穩定性佳。
3. 主動輥：輥面有擴張紋路設計，并以氣缸控制輥體之加壓夾紙。
4. 回切刀：以特殊合金鋼精密加工制成，壽命特長，刀刃容易調較。
5. 安全罩：安全罩掀開即自動停機,安全有保障。

1. Upper knife roller: The British cutter method is adopted to effectively reduce the load and noise during paper cutting, and to extend the life of the cutter. The upper knife roller body is welded with stainless steel for precision machining, and is dynamically balanced to effectively reduce high-speed operation. Time vibration and noise.
2. Lower tool holder: The lower tool holder is made of cast iron integrally formed and cast, and then precision processed, with good stability.
3. Active roller: The roller surface is designed with expansion lines, and the cylinder is used to control the pressure and paper clamping of the roller body.
4. Back-cutting knife: It is made of special alloy steel precision machining, with long service life and easy adjustment of the blade.
5. Safety cover: It will automatically shut down when the safety cover is opened, ensuring safety.

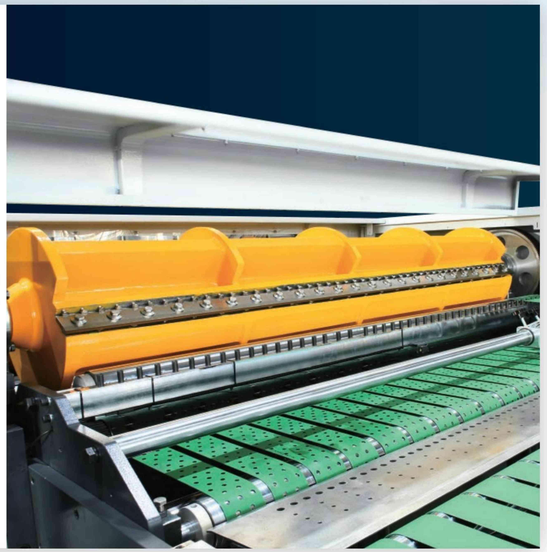

電器部分

ELECTRICAL SYSTEM

采用西門子PLC與英威騰伺服系統，實現精確定位及裁切。西門子觸摸屏及改進的操作界面，更好的符合人體工程學。

Using Siemens PLC and INVT servo system to achieve precise positioning and cutting. Siemens touch screen and improved operation interface make it more ergonomic.

三組分條刀可供修邊及對剖

THREE-COMPONENT STRIP KNIFE FOR TRIMMING AND CUTTING

剪切式分條刀組具有靠刀二段式動作，精確調整上下刀片重疊深度，可因不同入料方向來調整刀片角度及免用工具快遞固定刀組等特點。剪切式分切方式具有分切時粉末少，切面光滑及高速分切等特點。高剛性刀架更可適用于300m/min高速分條環境，提高生產效益并確保材料品質穩定性。

Shearing slitting knife set has the action of relying on the knife, which can accurately adjust the overlap depth of the upper and lower blades, adjust the blade Angle according to different feeding directions and fix the knife set without using tools. The cutting method has the characteristics of less powder, smooth cutting surface and high speed cutting. High rigidity tool rest is suitable for 300m/min high-speed slitting environment, improve production efficiency and ensure the stability of material quality.

重疊部分

OVERLAPPING UNIT

無極變頻調速控制的快/慢速帶，會自動跟踪刀速，自動調整速帶，使紙張能完美實現重疊。

The fast/slow speed belt controlled by variable frequency speed control can automatically track the knife speed, automatically adjust the speed belt, so that the paper can achieve perfect overlap.

收紙部

DELIVERY UNIT

自動升降系統以及三面互調的收紙部位，加上無極震蕩齊紙機構，保障紙張收的整齊又順暢。

Automatic lifting system and three sides of the intermodulation of the delivery unit, coupled with the non-polar vibration of the flat paper mechanism, to ensure that the paper delivery smooth.

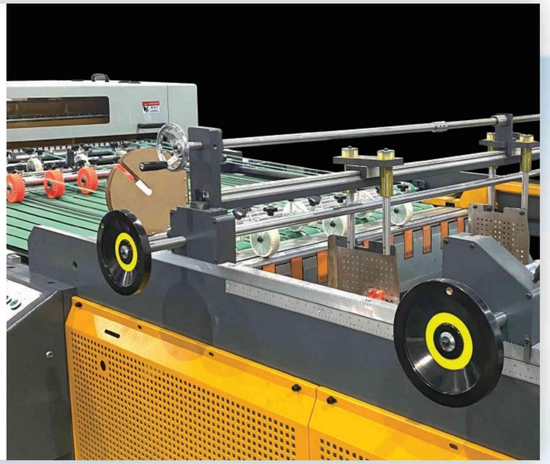

MS 系列地基安裝圖
MS SERIES INSTALLATION FLOOR PLAN

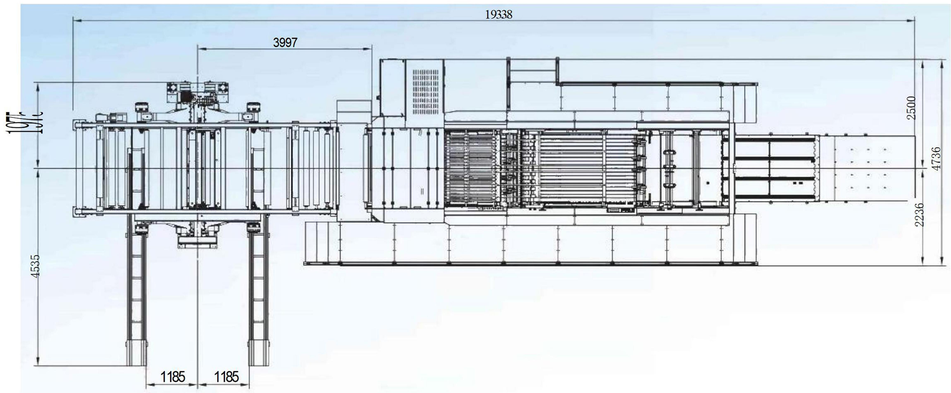

MZ 系列地基安裝圖
MZ SERIESINSTALLATION FLOOR PLAN

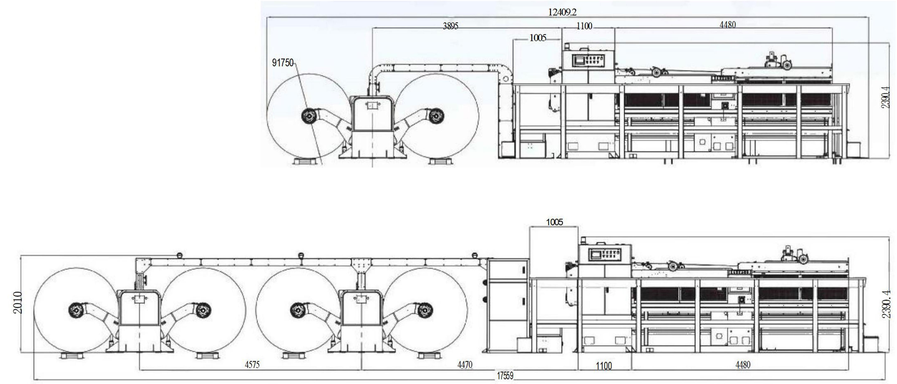

MS系列標配 MS SERIES STANDARD CONFIGURATION

液壓放紙架	Shaftless pivoting arm unwind stand
風冷氣剎	Air cooling pneumatic disc brake
自動張力	Auto tension control
電動反曲	Motorized de-curler
自動糾偏	EPC web guiding
雙螺旋橫切刀	Double rotary knife cylinders
三組分切刀	Three sets of Pneumatic Slitters
除靜電	Static Eliminator Device
過紙部	Out-feed and overlapping section
1700mm 高收紙部	Delivery unit for 1700mm piling height
計數與插標	Auto counting and tape inserter
雙觸摸屏	Dual touch screen
進口伺服系統等	JIIN PLC, UK CT Servo Driver, Schneider inverter, imported electrical components etc
主機一體化鑄件	Main body integrated cast iron

MZ系列標配 MZ SERIES STANDARD CONFIGURATION

液壓放紙架	Shaftless pivoting arm unwind stand
單螺旋橫切刀	High precision single rotary sheet cutter
自動對角	Squareness Adjustment System
除靜電	Static Eliminator Device
過紙部	Paper Conveyer System
計數與插標	Auto counting and Label inserter
收紙與闖紙	Delivery and Auto Jogger System
電動反曲	Motorized de-curler
自動張力	Auto-tension control
主機鋼構件	Main body steel structure

選配 OPTIONS

伺服系統自動調節縱切位置(僅用于 D 系列)	Servo system for automatic slitter adjustment (Only for D series)
膠軸反曲(僅用于 D/E 系列)	Rubber roller de-curler (Only for D/E series)
真空吸紙尾	Vacuum suction on paper edge
意大 RE 氣剎自動張力控制	Italy RE pneumatic brake for auto tension control
光標追踪對標對綫分切	Cut-to-register
定制機械夾頭,或通用尺寸錐形夾頭	Customized mechanical chuck or universal conical chuck
不停機接紙	Non-stop automatic paper splicer
不停機收紙	Non-stop delivery
自動換卡板	Automatic pallet feeding
分切及修邊吸廢(僅用于 S 系列)	Middle slitting and waste edge collecting system (Only for S series)
自動糾偏(僅用于 S 系列)	Auto-EPC (Edge paper control) (Only for S series)
不停機自動物流系統	Non-stop automatic logistics system
噴碼裝置	Ink-jet device
加大型油壓紙架	Enlarged hydraulic cylinder for paper unwinder
分切刀吸塵	Dust suction for slitter
修邊吸紙加碎紙機	Shredder blower for trimming waste
走紙吸塵裝置	Dust removal after cutting
輔助收紙吹風與皮帶(適合薄紙)	Blower and belts to assist delivery of thin paper
分切長度 2m	Cutting length to 2m
搖擺輥針對變形紙卷	Swing cylinder for out of round paper roll
雙回路冗餘控制安全繼電器	Safety relay for 2-channel redundant control
更多特殊定制供選擇……	More options to select according to definite demands...

SPECIFICATIONS			
Model		MZ 140	MZ 170
Cutting type		Top rotary knife, bottom fixed knife	Top rotary knife, bottom fixed knife
Paper weight range	gsm	60-550	60-550
Maximum paper format	mm	1400	1700
Maximum web diameter	mm	1800	1800
Cut-off length range	mm	400-1650	400-1650
Cutting accuracy	mm	± 0.3	± 0.3
Maximum cutting speed	m/min	300	300
Maximum number of cutting knives	p/min	350	350
Delivery height(incl.pallet)	mm	1500(including tray)	1500(including tray)
main motor power	kw	11	11
Total power	kw	30	30
Gross weight	kg	12000	13000
Air source	bar	6-8	6-8

機器速度表 MACHINE SPEEDOMETER

Model	MS 150	MS 170
Length(mm)	Meter speed(m/min)	Knife speed(cuts/min)
400	120	300
450	150	333
500	195	390
550	235	427
600	265	442
650	300	462
700	300	429
750	300	400
800	300	375
850	300	353
900	300	333
950	300	316
1000	300	300
1100	290	264
1200	285	238
1300	280	215
1400	280	200
1500	280	187
1600	280	175
1700	275	162

注:由于產品在不斷的改進,數據如有改動,恕不另行通知。